# TECHSEM

# MTC70 MTA70 MTK70 MTX70 MT70
## Thyristor Modules

**Features:**

- Isolated mounting base 2500V~
- Pressure contact technology with Incrtased power cycling capability
- Space and weight savings

**Typical Applications**

- AC/DC Motor drives
- Various rectifiers
- DC supply for PWM inverter

| | |
|---|---|
| $I_{T(AV)}$ | 70A |
| $V_{DRM}/V_{RRM}$ | 600~1800V |
| $I_{TSM}$ | $1.7A\times10^3$ |
| $I^2t$ | $14.5A^2 S*10^3$ |

| SYMBOL | CHARACTERISTIC | TEST CONDITIONS | $T_j$(°C) | VALUE | | | UNIT |
|---|---|---|---|---|---|---|---|
| | | | | Min | Type | Max | |
| $I_{T(AV)}$ | Mean on-state current | 180° half sine wave 50Hz<br>Single side cooled, $T_c$=85°C | 125 | | | 70 | A |
| $I_{T(RMS)}$ | RMS on-state current | | 125 | | | 110 | A |
| $V_{DRM}$<br>$V_{RRM}$ | Repetitive peak off-state voltage<br>Repetitive peak reverse voltage | $V_{DRM}$&$V_{RRM}$ tp=10ms<br>$V_{DsM}$&$V_{RsM}$= $V_{DRM}$&$V_{RRM}$+100V<br>respectively | 125 | 600 | | 1800 | V |
| $I_{DRM}$<br>$I_{RRM}$ | Repetitive peak current | at $V_{DRM}$<br>at $V_{RRM}$ | 125 | | | 10 | mA |
| $I_{TSM}$ | Surge on-state current | 10ms half sine wave<br>$V_R$=60%$V_{RRM}$ | 125 | | | 1.70 | KA |
| $I^2t$ | $I^2T$ for fusing coordination | | | | | 14.5 | $A^2s*10^3$ |
| $V_{TO}$ | Threshold voltage | | 125 | | | 0.80 | V |
| $r_T$ | On-state slop resistance | | | | | 2.64 | mΩ |
| $V_{TM}$ | Peak on-state voltage | $I_{TM}$=210A | 25 | | | 1.48 | V |
| dv/dt | Critical rate of rise of off-state voltage | $V_{DM}$=67%$V_{DRM}$ | 125 | | | 800 | V/μs |
| di/dt | Critical rate of rise of on-state current | Gate source 1.5A<br>$t_r$ ≤0.5μs Repetitive | 125 | | | 50 | A/μs |
| $I_{GT}$ | Gate trigger current | $V_A$=12V, $I_A$=1A | 25 | 30 | | 100 | mA |
| $V_{GT}$ | Gate trigger voltage | | | 0.8 | | 2.5 | V |
| $I_H$ | Holding current | | | 20 | | 120 | mA |
| $V_{GD}$ | Non-trigger gate voltage | $V_{DM}$=67%$V_{DRM}$ | 125 | 0.2 | | | V |
| $R_{th(j-c)}$ | Thermal resistance<br>Junction to case | Single side cooled | | | | 0.410 | °C /W |
| $R_{th(c-h)}$ | Thermal resistance<br>case to heatsink | Single side cooled | | | | 0.2 | °C /W |
| $V_{iso}$ | Isolation voltage | 50Hz,R.M.S,t=1min,$I_{iso}$:1mA(MAX) | | 2500 | | | V |
| $F_m$ | Thermal connection torque(M5) | | | | 4.0 | | N·m |
| | Mounting torque(M6) | | | | 6.0 | | N·m |
| $T_{stg}$ | Stored temperature | | | -40 | | 140 | °C |
| $W_t$ | Weight | | | | 115 | | g |
| Outline | 215F3/223F3 | | | | | | |

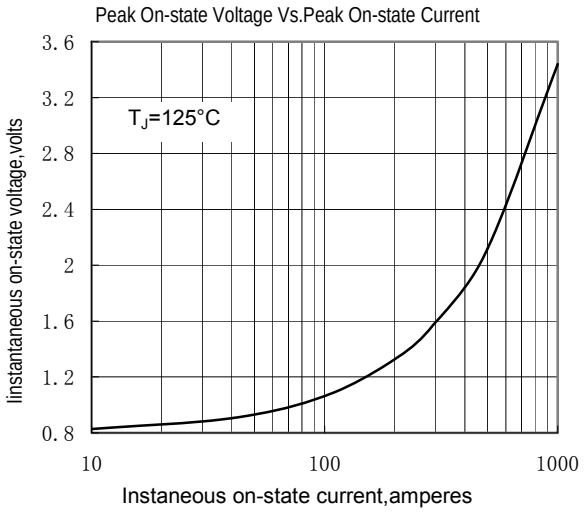


Fig.1

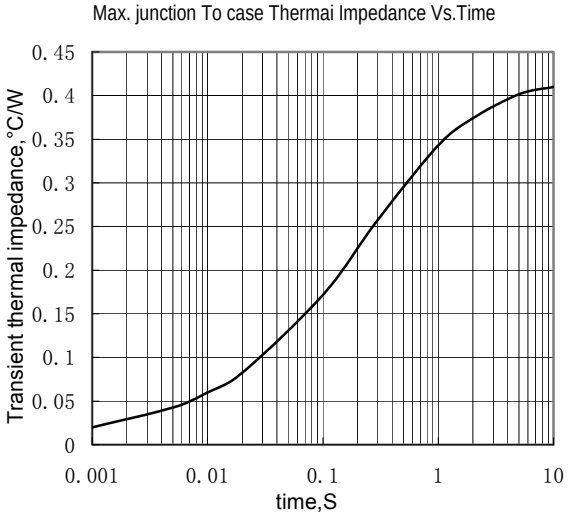


Fig.2

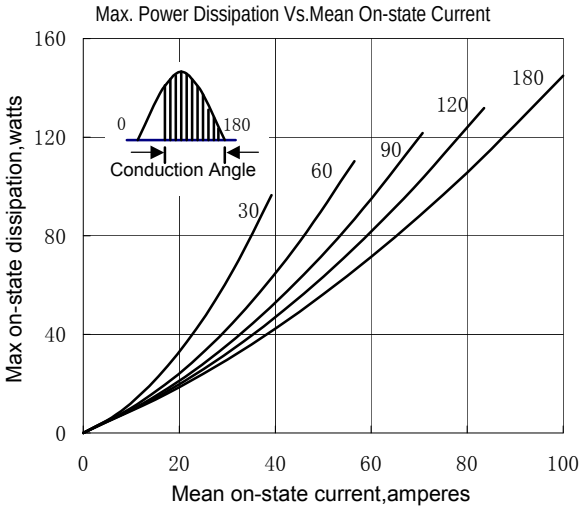


Fig.3

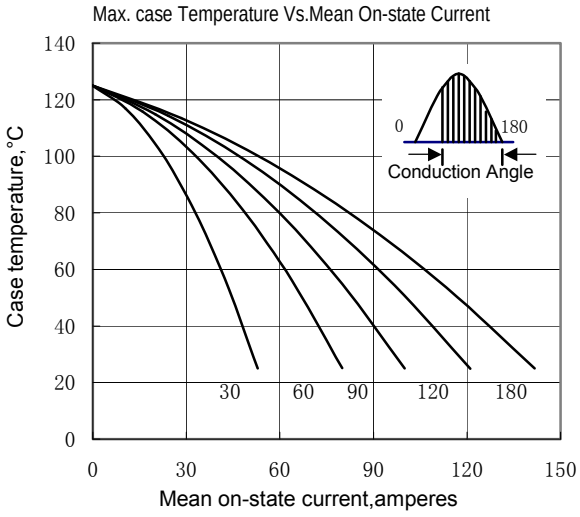


Fig.4

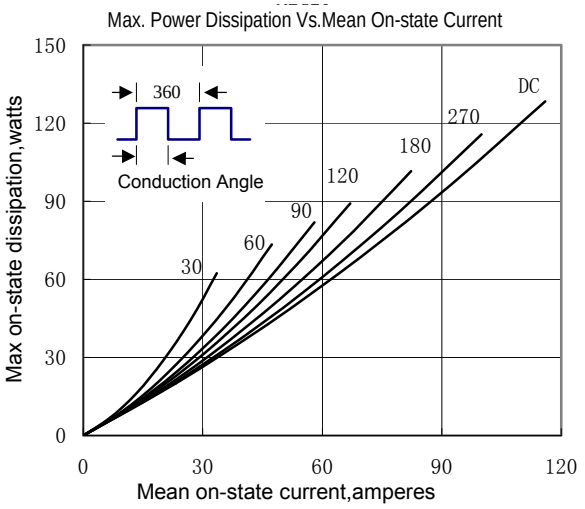


Fig.5

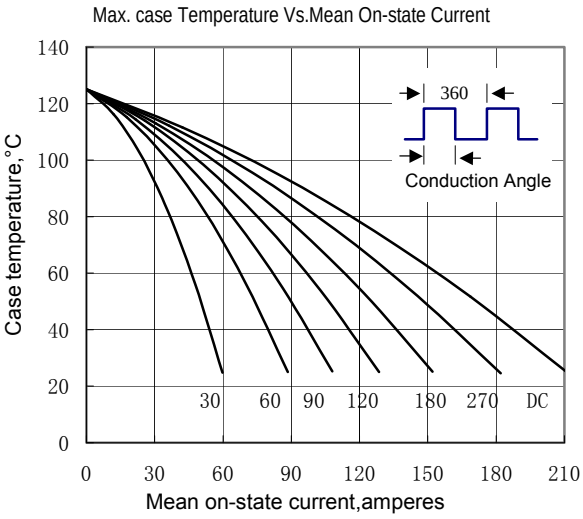


Fig.6

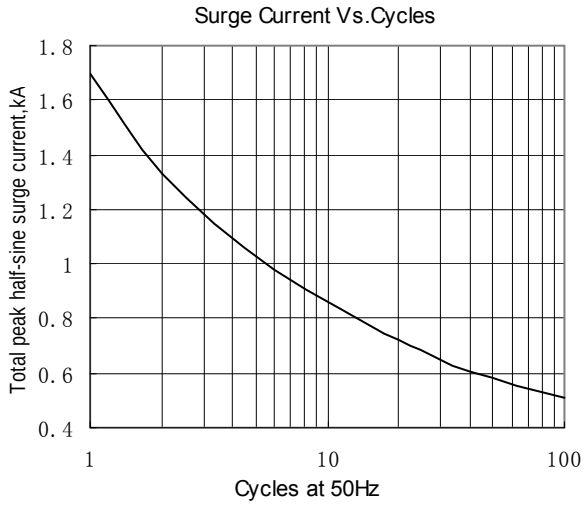


Fig.7

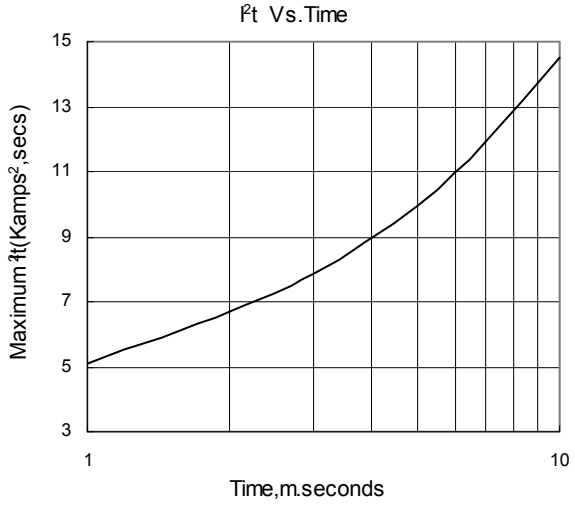


Fig.8

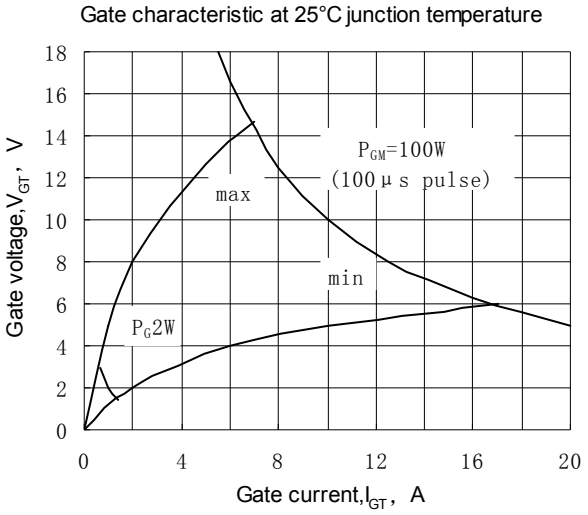


Fig.9

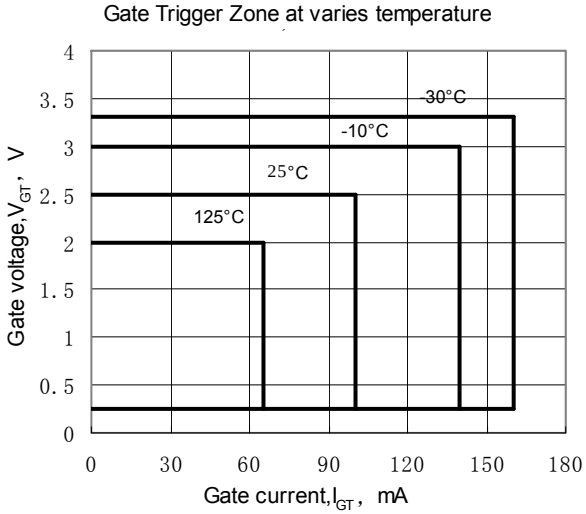


Fig.10

**Outline:**

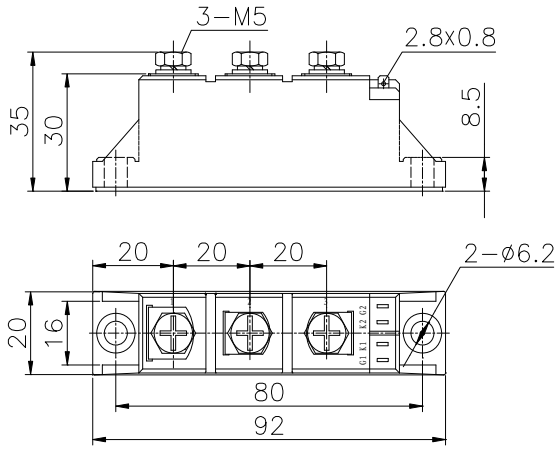

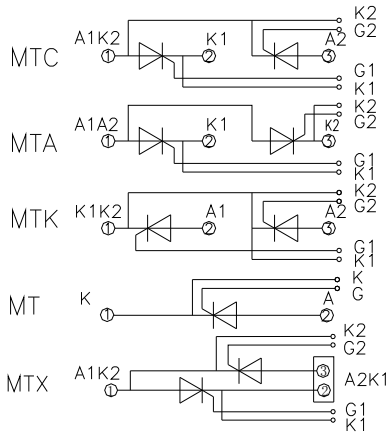
**215F3**