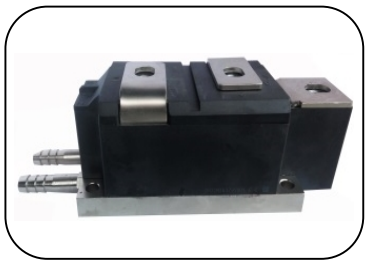

Features：

- Isolated mounting base 3000V~
- Pressure contact technology with Increased power cycling capability
- Space and weight saving

Typical Applications:

- Various rectifiers
- DC supply for PWM inverter

V_{RRM}	Type & Outline
2000V	MDx800-20-411F3
2200V	MDx800-22-411F3
2500V	MDx800-25-411F3
2500V	MD800-25-411F3G

MDx stands for any type of **MDC, MDA, MDK**

SYMBOL	CHARACTERISTIC	TEST CONDITIONS	T_j(°C)	VALUE			UNIT
				Min	Type	Max	
$I_{F(AV)}$	Mean forward current	180° half sine wave 50Hz Single side cooled, T_C=60°C	150			800	A
$I_{F(RMS)}$	RMS forward current					1256	A
I_{RRM}	Repetitive peak current	at V_{RRM}	150			45	mA
I_{FSM}	Surge forward current	V_R=60%V_{RRM}, t=10ms half sine,	150			18.0	kA
I^2t	I^2t for fusing coordination					1620	10^3A^2s
V_{FO}	Threshold voltage		150			0.88	V
r_F	Forward slope resistance					0.30	mΩ
V_{FM}	Peak forward voltage	I_{FM}=2400A	25			1.75	V
$R_{th(j-c)}$	Thermal resistance Junction to case	Single side cooled per chip				0.075	°C/W
$R_{th(c-h)}$	Thermal resistance case to heatsink	Single side cooled per chip				0.024	°C/W
V_{iso}	Isolation voltage	50Hz,R.M.S,t=1min,I_{iso}:1mA(MAX)		3000			V
F_m	Terminal connection torque(M12)			12		16	N·m
	Mounting torque(M8)			10		12	N·m
T_{vj}	Junction temperature			-40		150	°C
T_{stg}	Stored temperature			-40		125	°C
W_t	Weight				3230		g
Outline	411F3						

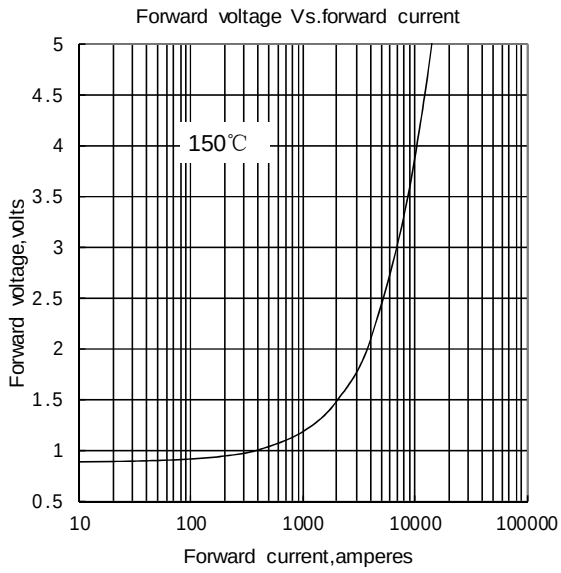

Fig.1

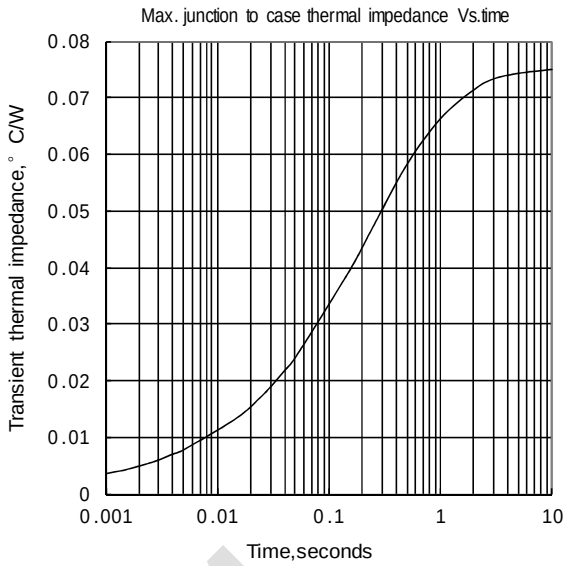

Fig.2

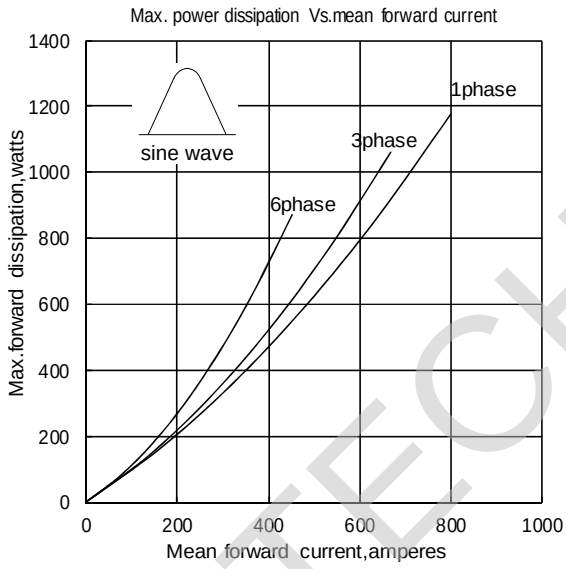

Fig.3

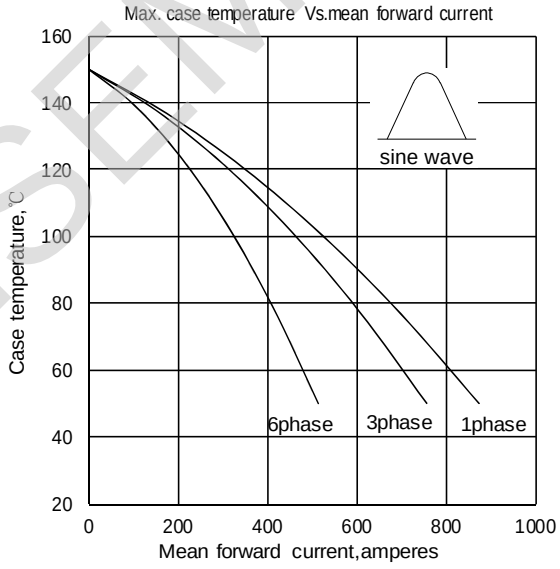

Fig.4

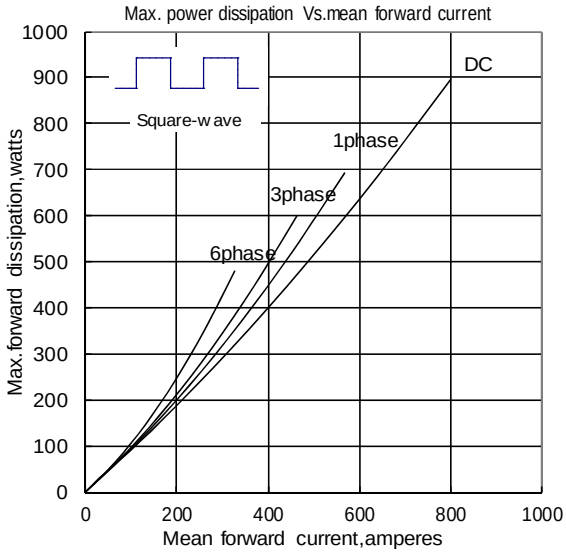

Fig.5

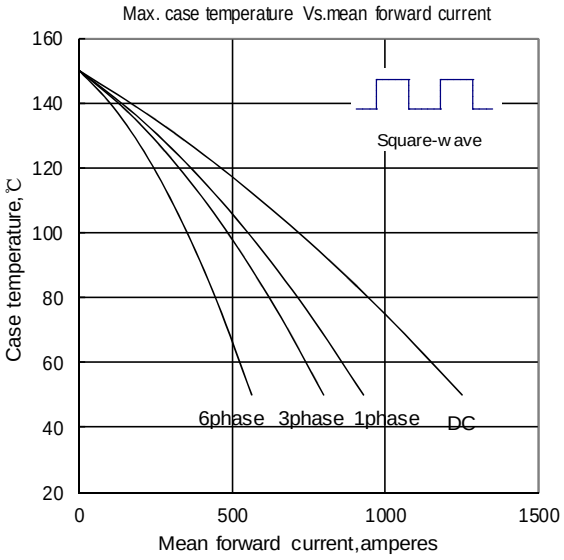

Fig.6

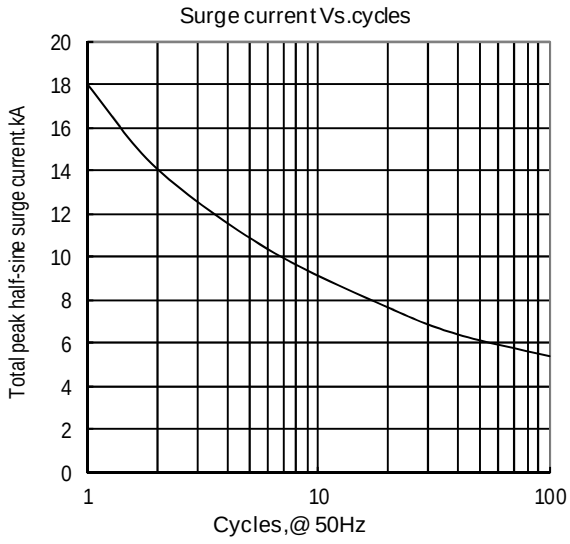

Fig.7

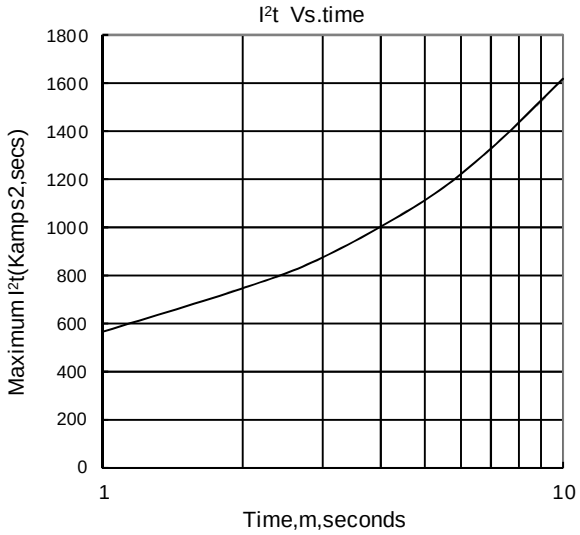

Fig.8

Outline:

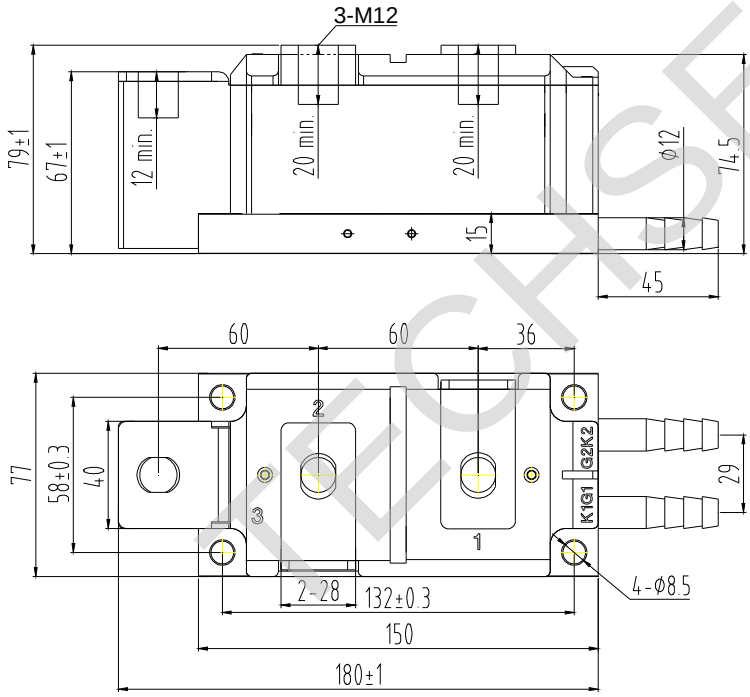

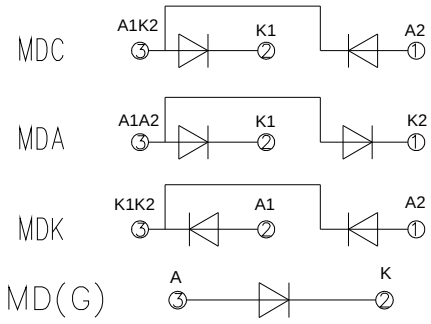

Unmarked dimensional tolerance：±0.5mm