Features:

- **n** Isolated mounting base 3000V~
- **n** Pressure contact technology with Increased power cycling capability
- **n** Space and weight saving

Typical Applications

- **n** AC/DC Motor drives
- **n** Various rectifiers
- **n** DC supply for PWM inverter

V_{RRM},V_{DRM}	Type & Outline	
2000V	MTx70-20-223F3	MTx70-20-223F3B
2200V	MTx70-22-223F3	MTx70-22-223F3B
2500V	MTx70-25-223F3	MTx70-25-223F3B
2500V	MT70-25-223F3G	

MTx stands for any type of **MTC, MTA, MTK**

SYMBOL	CHARACTERISTIC	TEST CONDITIONS	T_j(°C)	VALUE			UNIT
				Min	Type	Max	
$I_{T(AV)}$	Mean on-state current	180° half sine wave 50Hz Single side cooled, T_C=85°C	125			70	A
$I_{T(RMS)}$	RMS on-state current					110	A
I_{DRM} I_{RRM}	Repetitive peak current	at V_{DRM} at V_{RRM}	125			12	mA
I_{TSM}	Surge on-state current	V_R=60%V_{RRM}, t=10ms half sine,	125			1.70	kA
I^2t	I^2t for fusing coordination		125			14.5	10^3A^2s
V_{TO}	Threshold voltage		125			0.92	V
r_T	On-state slope resistance					3.20	mΩ
V_{TM}	Peak on-state voltage	I_{TM}=210A	25			1.93	V
dv/dt	Critical rate of rise of off-state voltage	V_{DM}=67%V_{DRM}	125			1000	V/μs
di/dt	Critical rate of rise of on-state current	Gate source 1.5A t_r ≤0.5μs Repetitive	125			200	A/μs
I_{GT}	Gate trigger current	V_A=12V, I_A=1A	25	30		150	mA
V_{GT}	Gate trigger voltage			0.7		2.5	V
I_H	Holding current			10		200	mA
I_L	Latching current					1000	mA
V_{GD}	Non-trigger gate voltage	V_{DM}=67%V_{DRM}	125			0.20	V
$R_{th(j-c)}$	Thermal resistance Junction to case	Single side cooled per chip				0.41	°C/W
$R_{th(c-h)}$	Thermal resistance case to heatsink	Single side cooled per chip				0.20	°C/W
V_{iso}	Isolation voltage	50Hz,R.M.S,t=1min,I_{iso}:1mA(MAX)		3000			V
F_m	Terminal connection torque(M5)			2.5		4	N·m
	Mounting torque(M6)			4.5		6	N·m
T_{vj}	Junction temperature			-40		125	°C
T_{stg}	Stored temperature			-40		125	°C
W_t	Weight				175		g
Outline	223F3, 223F3B						

TECHSEM

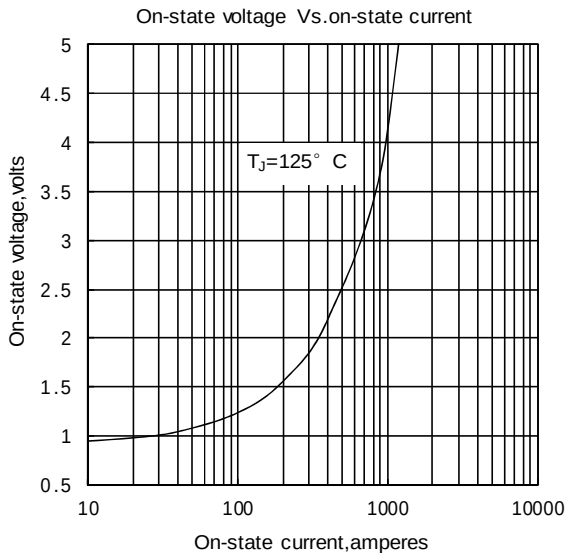

Fig.1

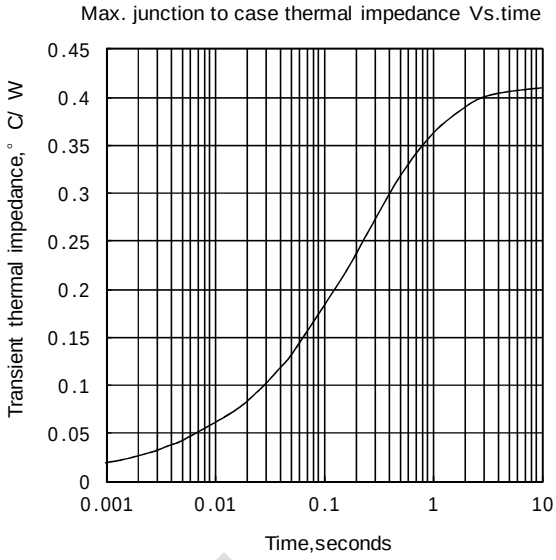

Fig.2

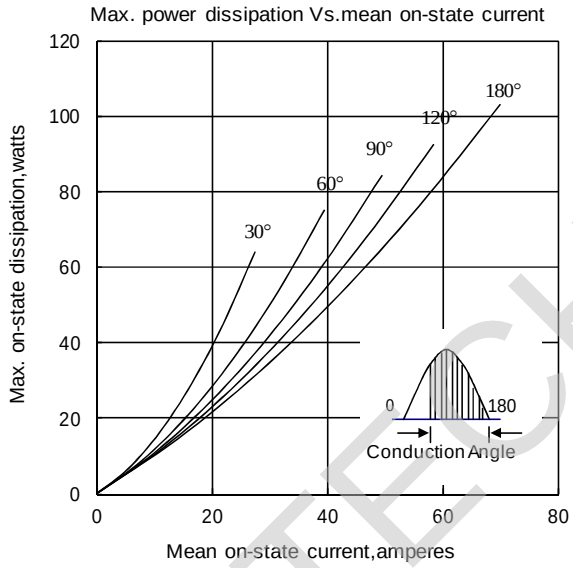

Fig.3

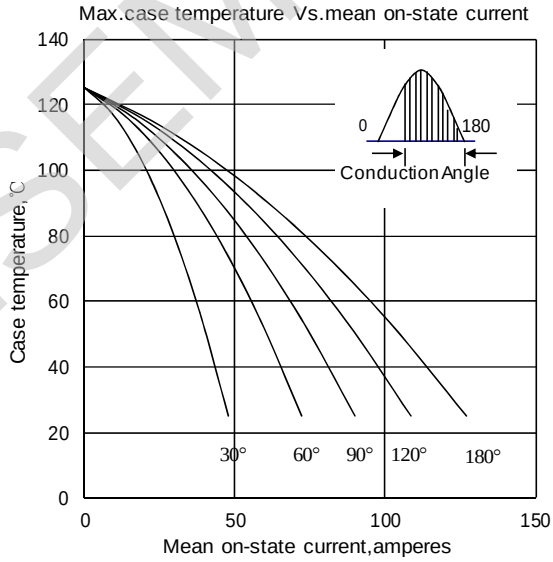

Fig.4

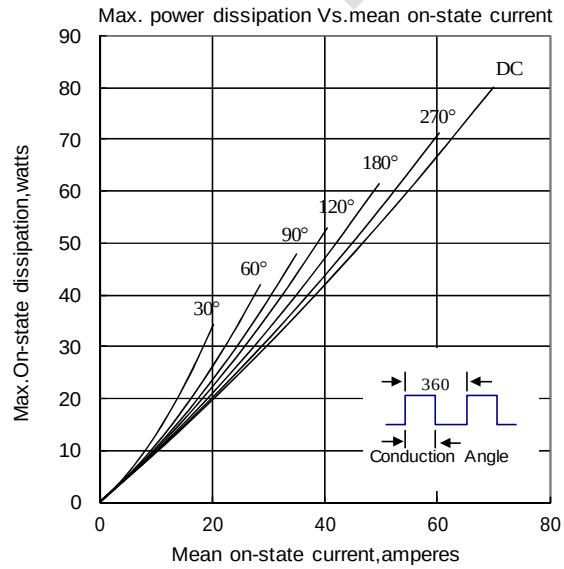

Fig.5

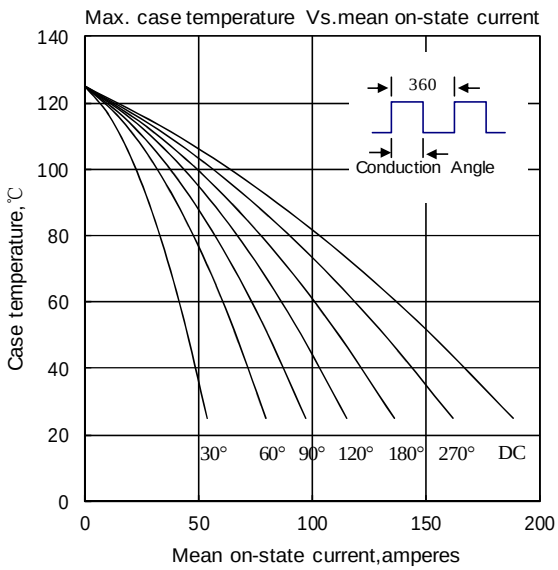

Fig.6

TECHSEM

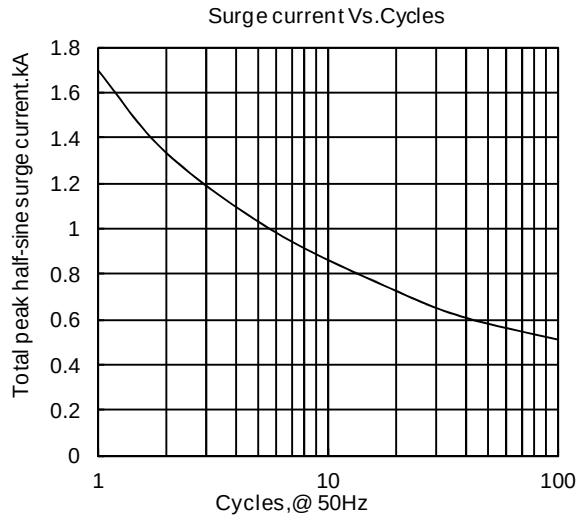

Fig.7

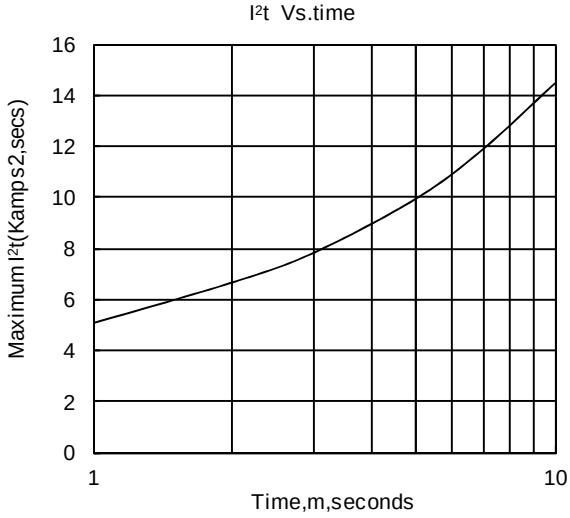

Fig.8

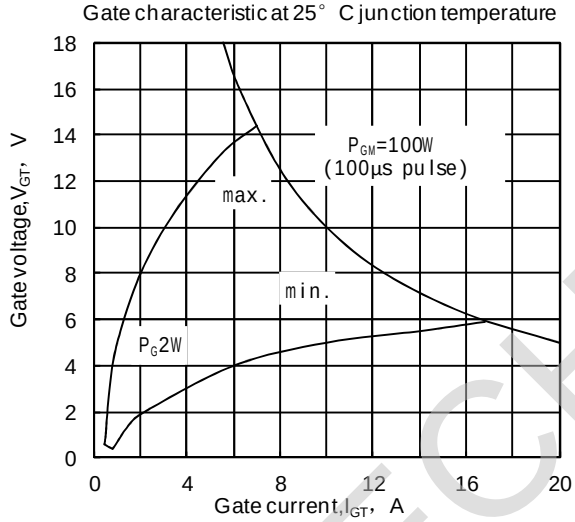

Fig.9

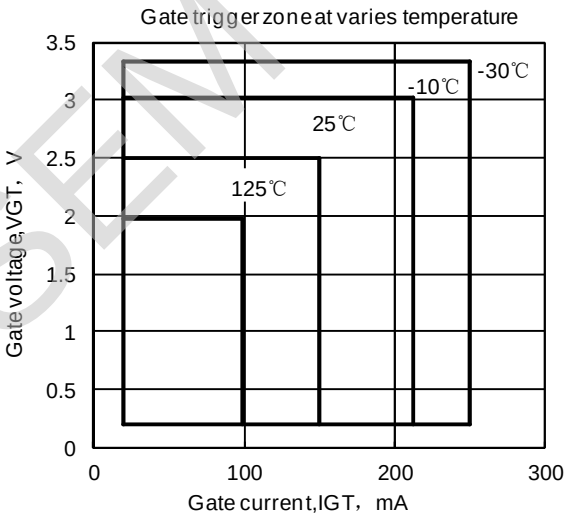

Fig.10

Outline:

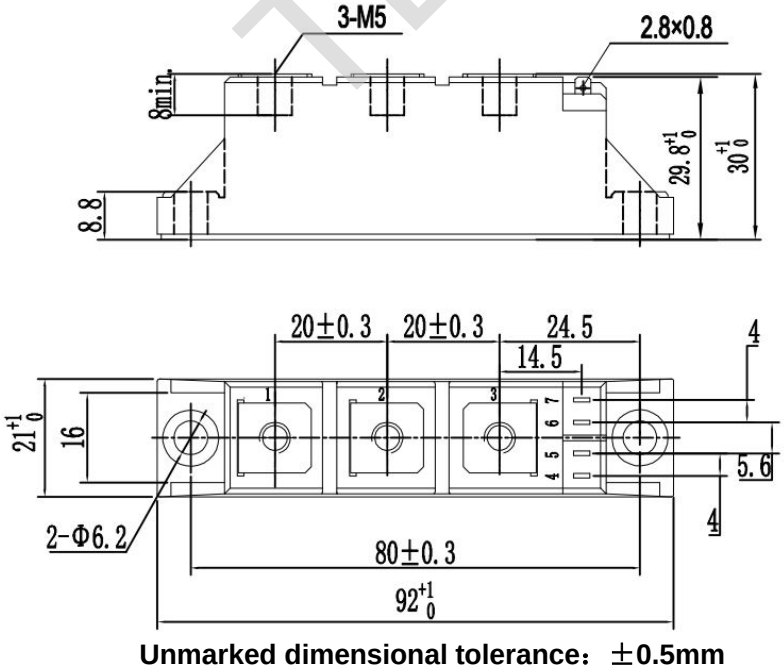

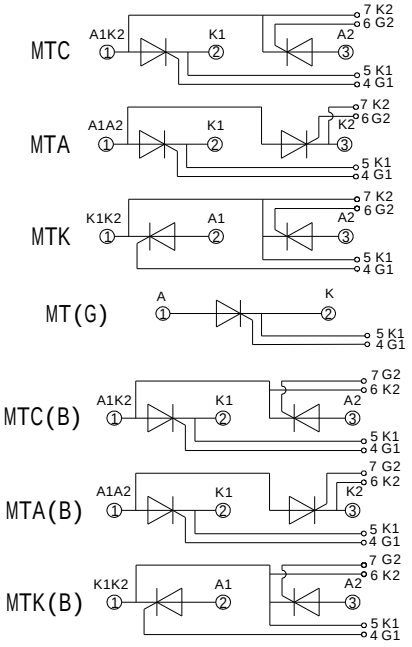

Unmarked dimensional tolerance：±0.5mm

TECHSEM reserves the right to change specifications without notice.