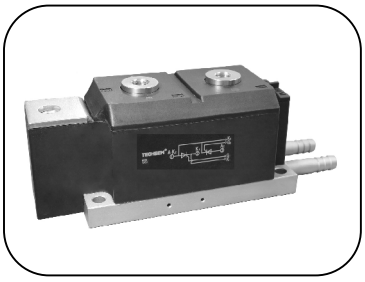

Features:

- Isolated mounting base 3000V~
- Pressure contact technology with Increased power cycling capability
- Space and weight saving

Typical Applications

- AC/DC Motor drives
- Various rectifiers
- DC supply for PWM inverter

V_{RRM},V_{DRM}	Type & Outline	
2000V	MTx800-20-411F3	MFx800-20-411F3
2200V	MTx800-22-411F3	MFx800-22-411F3
2500V	MTx800-25-411F3	MFx800-25-411F3
2500V	MT800-25-411F3G	

MTx stands for any type of **MTC, MTA, MTK**
MFx stands for any type of **MFC, MFA, MFK**

SYMBOL	CHARACTERISTIC	TEST CONDITIONS	T_j(°C)	VALUE			UNIT
				Min	Type	Max	
$I_{T(AV)}$	Mean on-state current	180° half sine wave 50Hz Single side cooled, T_{HS}=55°C	125			800	A
$I_{T(RMS)}$	RMS on-state current					1256	A
I_{DRM} I_{RRM}	Repetitive peak current	at V_{DRM} at V_{RRM}	125			50	mA
I_{TSM}	Surge on-state current	V_R=60%V_{RRM}, t=10ms half sine	125			16.0	kA
I^2t	I^2t for fusing coordination		125			1280	10^3A^2s
V_{TO}	Threshold voltage		125			0.98	V
r_T	On-state slope resistance					0.35	mΩ
V_{TM}	Peak on-state voltage	I_{TM}=2400A	25			2.35	V
dv/dt	Critical rate of rise of off-state voltage	V_{DM}=67%V_{DRM}	125			1000	V/μs
di/dt	Critical rate of rise of on-state current	Gate source 1.5A t_r≤0.5μs Repetitive	125			200	A/μs
I_{GT}	Gate trigger current	V_A=12V, I_A=1A	25	30		200	mA
V_{GT}	Gate trigger voltage			0.8		3.0	V
I_H	Holding current			10		200	mA
I_L	Latching current					1000	mA
V_{GD}	Non-trigger gate voltage	V_{DM}=67%V_{DRM}	125			0.20	V
$R_{th(j-c)}$	Thermal resistance Junction to case	Single side cooled per chip				0.050	°C/W
$R_{th(c-h)}$	Thermal resistance case to heatsink	Single side cooled per chip				0.024	°C/W
V_{iso}	Isolation voltage	50Hz,R.M.S, t=1min, I_{iso}:1mA(MAX)		3000			V
F_m	Terminal connection torque(M12)			12		16	N·m
	Mounting torque(M8)			10		12	N·m
T_{vj}	Junction temperature			-40		125	°C
T_{stg}	Stored temperature			-40		125	°C
W_t	Weight				3230		g
Outline	411F3						

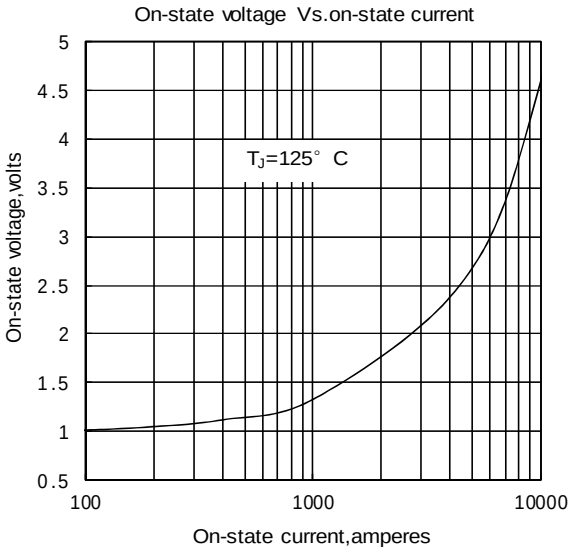

Fig.1

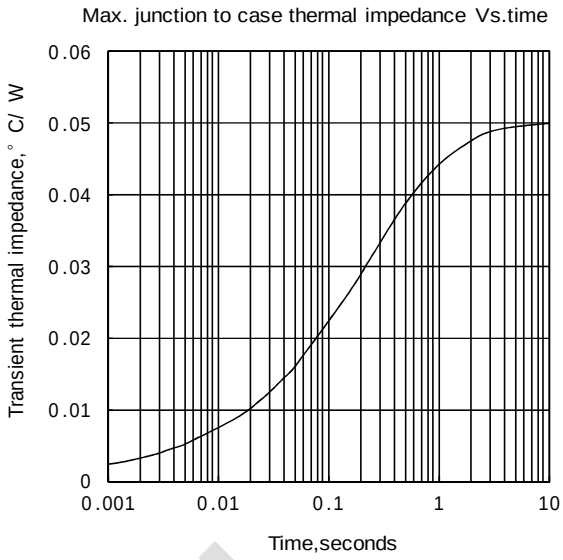

Fig.2

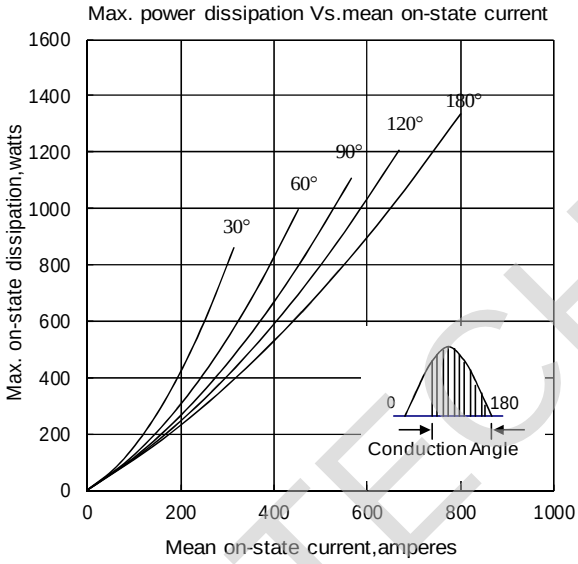

Fig.3

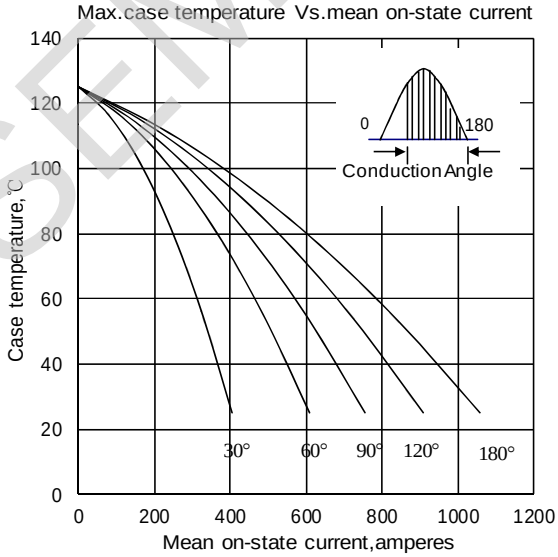

Fig.4

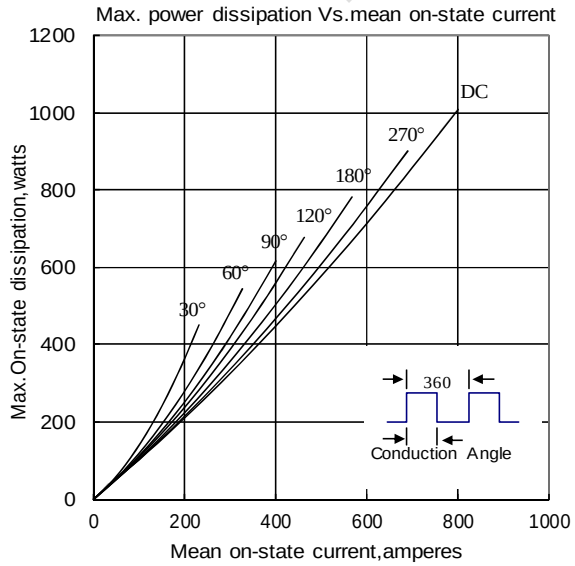

Fig.5

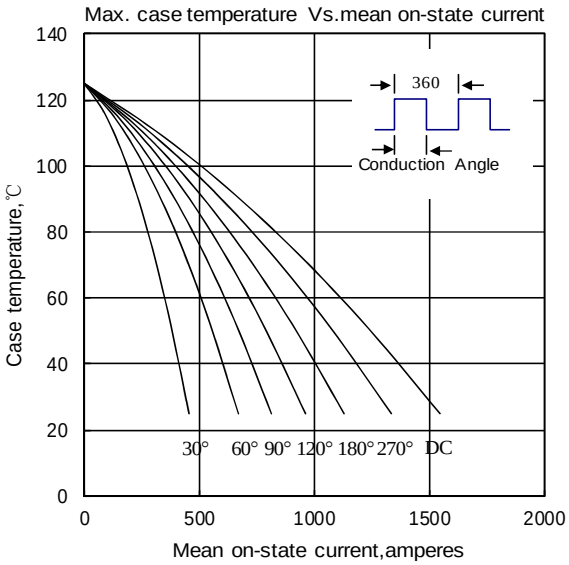

Fig.6

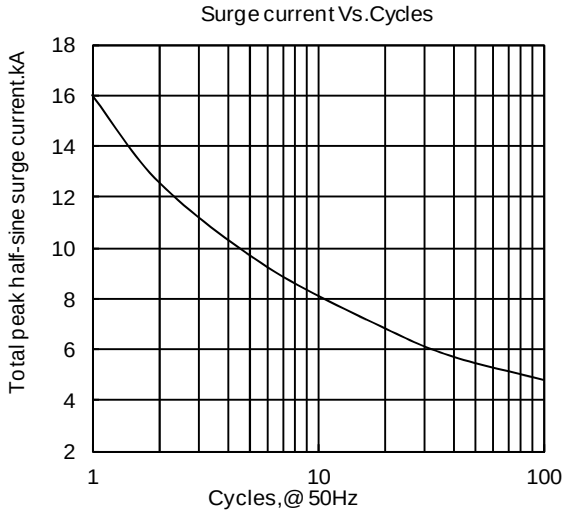

Fig.7

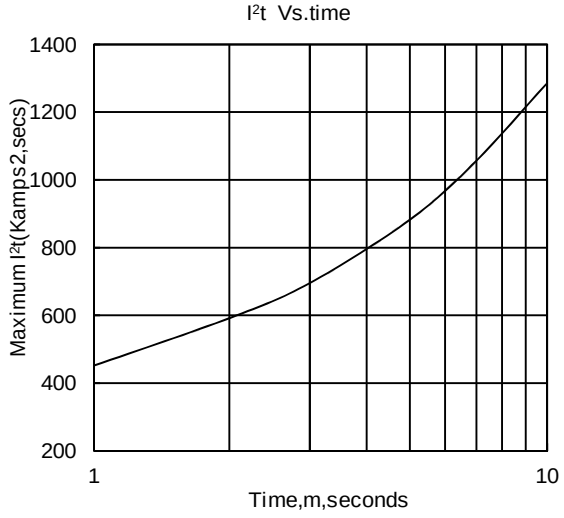

Fig.8

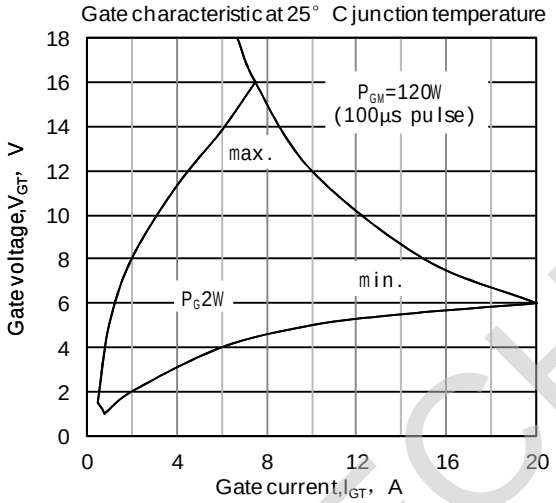

Fig.9

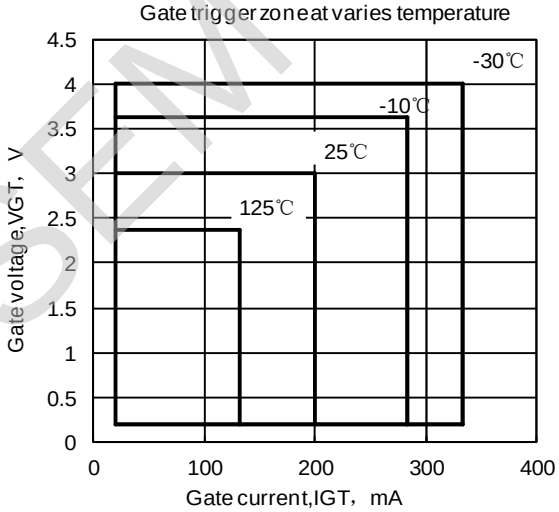

Fig.10

Outline:

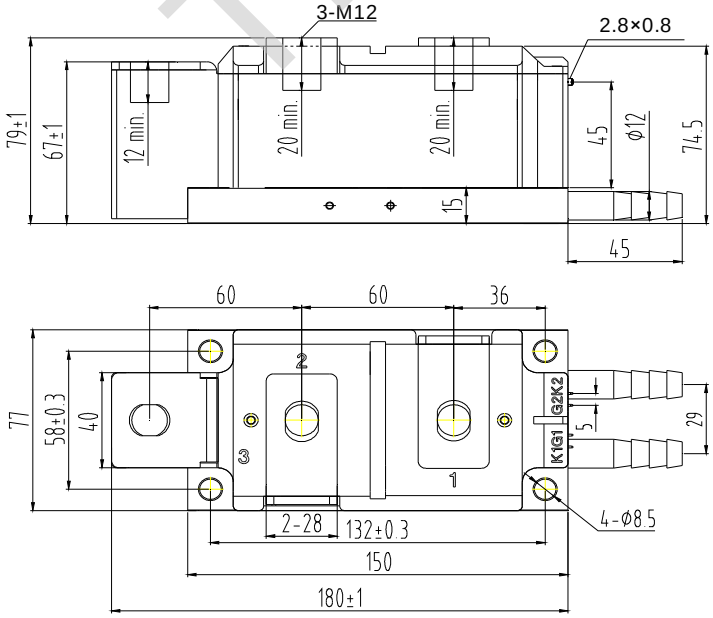

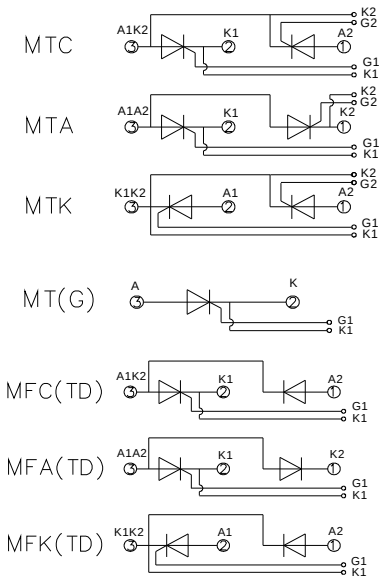

Unmarked dimensional tolerance：±0.5mm

TECHSEM reserves the right to change specifications without notice.